36 inch Masterpiece® Series Freedom® Induction Cooktop
CIT36XKB

INNOVATION

- Largest fully usable cooking surface on the market.
- 48 induction elments deliver more than 63% usable cooking surface than the competition.
- Place up to 4 pots or pans anywhere on the cooktop surface in any configuration.
- Featuring the first full color touchscreen induction user interface on the market. This intuitive interface offers better control and faster access to cooking settings.
- Freedom to move. If you need to move your pot to another location, the cooktop will transfer all of your programmed settings to the new position of the pan.

PERFORMANCE

- Most powerful element in its class with a 4,600 W PowerBoost™ lets you boil water faster than with any other cooking technology.
- Speed Heating - Induction cooktops heat 50% faster than traditional gas cooktops
- Pan Recognition - Element will not turn on if other small objects are placed on the cooking zone
- Anti-Overflow System - exclusive feature shutting off the relevant element and sounding alarm when liquids are detected on user interface
- Child Safety Lock

DESIGN

- Full stainless steel frame
- Grey-black glass color
- Angular, modern design coordinates with the suite of Thermador Masterpiece™ Collection appliances

COPYRIGHT 2016 BSH HOME APPLIANCES CORPORATION, ALL RIGHTS RESERVED

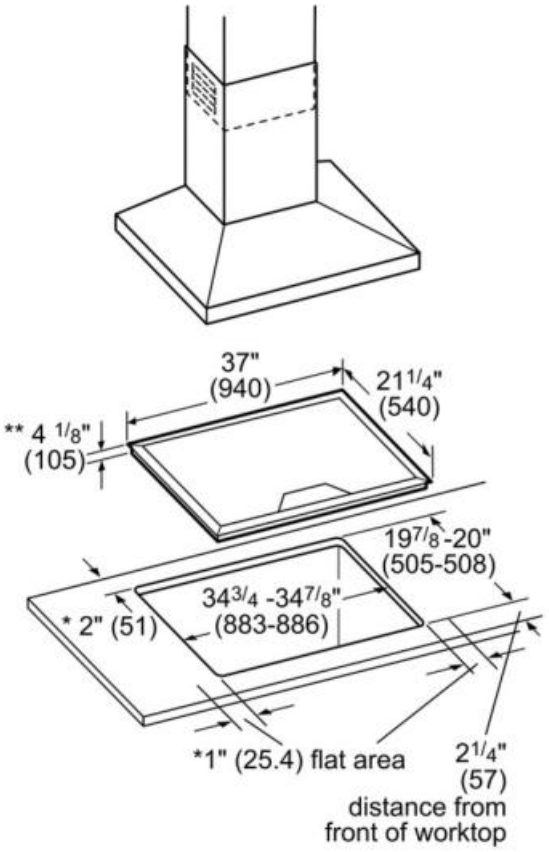

* Minimum distance from cutout to the wall
** Recessed depth
(includes 1" air clearance)

measurements in inches (mm in brackets)

Amps (A)	40
Frequency (Hz)	50; 60
Approval certificates	CSA
Plug type	no plug
Minimum distance from counter front (in)	2 1/2"
Minimum distance from rear wall (in)	2 3/8"
Net weight (lbs)	69
Optional accessories	CHEFSPAN13, SENSORPOT6, SENSORPOT7, SENSORPOTH, TEPPAN1314, TEPPAN1321
Sealed burners	No
Dimension of 1st heating element (in)	21" X 13
Power of 1st heating element (W)	3.6
Power of 1st heating element (W)	3.6
Power of 1st heating element (kW in boost)	4.6
Location of 2nd heating element	back left
Location of 3rd heating element	back right
Location of 4th heating element	right

COPYRIGHT 2016 BSH HOME APPLIANCES CORPORATION, ALL RIGHTS RESERVED