Thermador

INNOVATION

- NEW The only SoftClose® door on the market. Thermador exclusive feature
- Massive Capacity - Largest oven cavity at 4.7 cu.ft. (overall AHAM)
- Fastest preheat in the luxury segment (around 7 minutes). Thermador exclusive feature
- Superfast 2-hour self clean mode - fastest on the market. Thermador exclusive feature

PERFORMANCE

- Both ovens offer true convection cooking
- True Convection offers precise airflow for cooking on multiple levels without flavor transfer
- NEW 3 Full Access® telescopic racks hold up to 45 pounds each, integrated easy grip handle
- No preheat needed. Industry leading Speed Convection system reduces cooking time by 30%
- CookControl™ temperature probe
- Easy Cook® offers 20 pre-programmed recipes
- Powerful halogen light with automatic dimming
- 10-pass recessed broil element with 3,500 Watt
- 14 advanced cooking modes
- Advanced culinary modes - Warm, Proof and Dehydrate
- Fast Preheat available for 5 cooking modes
- Large oven door window for maximum viewing
- Timer offers automatic delay start mode
- Hidden bake element for easy cleaning
- Digital indicator shows progress of preheat cycle
- Six adjustable rack levels for multiple item cooking
- NEW Star-K certified

DESIGN

- NEW Side strips, manifold and exhaust baffle now in bold stainless steel design
- Modern angular design
- Premium glass touch control

COPYRIGHT 2016 BSH HOME APPLIANCES CORPORATION, ALL RIGHTS RESERVED

- Striking blue full text display

COPYRIGHT 2016 BSH HOME APPLIANCES CORPORATION, ALL RIGHTS RESERVED

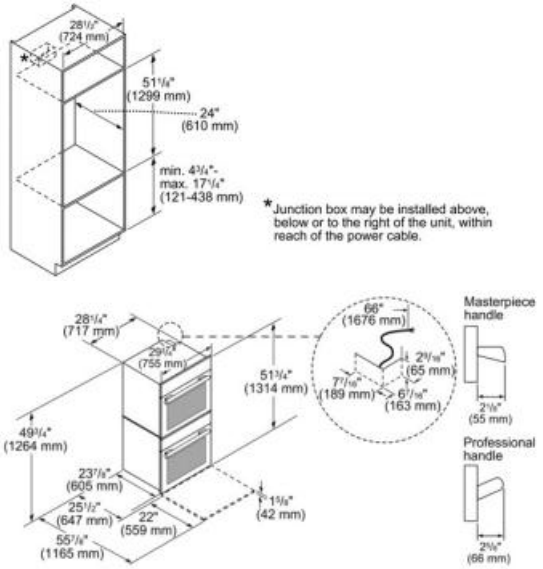

Amps (A)	40
Frequency (Hz)	60
Approval certificates	CSA, STAR-K
Plug type	fixed connection, no plug
Net weight (lbs)	294
Included accessories	3 x oven racks /upper, 3 x oven racks /lower, 1 x Broiler pan /upper, 1 x temperature probe /upper

COPYRIGHT 2016 BSH HOME APPLIANCES CORPORATION, ALL RIGHTS RESERVED