DESIGN

- 24", 27" or 30" installation posssible. For 30" installation purchase trim kit MST301HS. For 27" installation purchase trim kit MST271KS.
- Beautiful stainless steel cavity is illuminated with powerful halogen lighting.
- Masterpiece handle.

INNOVATION

- Until now steam has been the technique for professional restaurants and is now available for the culinary enthusiast.
- Steam and Convection Cooking provides unrivaled food taste and quality. Food stays moist on the inside and is perfectly finished on the outside.
- The ultimate culinary tool–the Steam and Convection Oven offers passionate cooks three cooking solutions–Steam, True Convection, and Steam and Convection.
- Steam offers a healthy cooking
- method and retains food’s valuable vitamins and nutrients.
- 40 Easy Cook® food programs. Pre-programmed modes automatically set the oven temperature and humidity to ensure perfect cooking results.

PERFORMANCE

- Steam & convection cooking is effortless and reduces the risk of over-cooking, over-boiling or dried out food.
- 1.4 cu.ft. cavity easily accommodates a 14lb. Turkey.
- Features 9 advanced conventional cooking modes.
- 6 different favorite settings can be individually programmed.
- 1 rack, 2 perforated and 2 non-perforated pans included.
- Our non-plumbed oven allows for easy installation

COPYRIGHT 2016 BSH HOME APPLIANCES CORPORATION, ALL RIGHTS RESERVED

into any home.

- Steam Clean assist function keeps the oven spotless.
- Large 1.4 qt. water tank can be used for an entire cooking cycle.
- Child safety lock.

COPYRIGHT 2016 BSH HOME APPLIANCES CORPORATION, ALL RIGHTS RESERVED

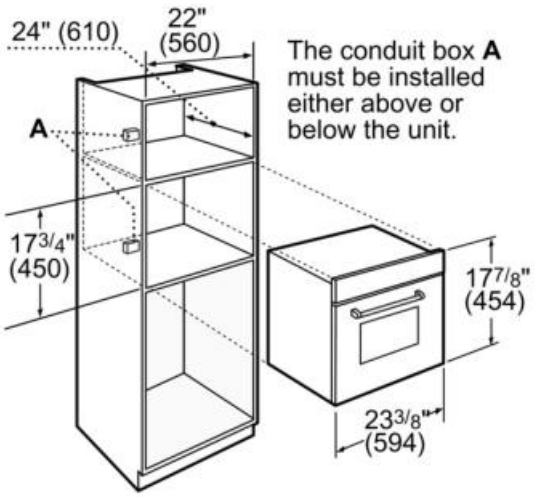

Measurements in inches (mm)

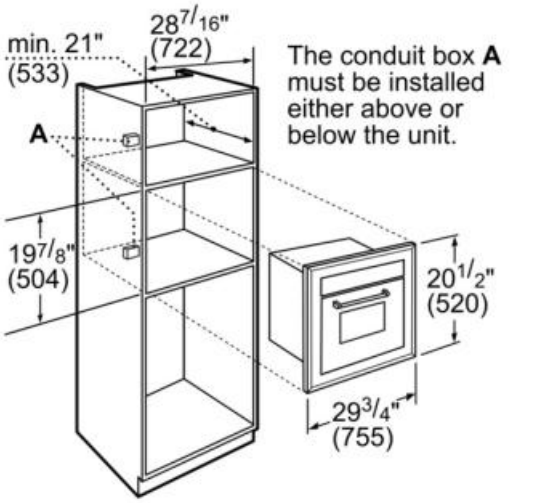

Measurements in inches (mm)

Amps (A)	15
Frequency (Hz)	60
Approval certificates	ETL
Plug type	fixed connection
Net weight (lbs)	61
Optional accessories	CS1XLH, CS1XLPH, CS2LH, CS2XLH, CS2XLPH, CSRACKH, MST271KS, MST301HS
Included accessories	1 x STS tray-GN2/3-unpunched-28 mm deep, 1 x STS tray-GN1/3-punched-40 mm deep, 1 x STS tray-GN2/3-punched-40 mm deep, 1 x grid, 1 x STS tray-GN1/3-unpunched-40 mm deep

COPYRIGHT 2016 BSH HOME APPLIANCES CORPORATION, ALL RIGHTS RESERVED