INNOVATION

- Exlusive, patented Star® Burner – most even heating, unsurpassed flame coverage
- QuickClean Base™ designed for easy surface cleaning
- Every burner 18,000 BTU (NG)
- Precision simmering capabilities as low as 100°F (375 BTU) with 2 ExtraLow® Simmer burners

PERFORMANCE

- Professional style, continuous cast iron grates
- Continuous porcelain, easy to clean cooking surface
- Widest range of simmer options from 375 BTU to 3,000 BTU
- Star® design delivers superior heat spread for any size pan
- Simmer without stirring/scorching with exclusive ExtraLow®
- Superior griddle results-6 pass, 1630 watt electric griddle
- Titanium surface non-stick, rust-proof cast-aluminum griddle
- Removable griddle and grill accessory for easy clean-up
- Grill accessory-thermostatically controlled for even heating

DESIGN

- Bold Professional design
- Patented Pedestal Star® Burner with QuickClean Base™
- Restaurant style metal knobs
- Signature blue indicator lighting
- Island trim shipped standard with rangetop

COPYRIGHT 2016 BSH HOME APPLIANCES CORPORATION, ALL RIGHTS RESERVED

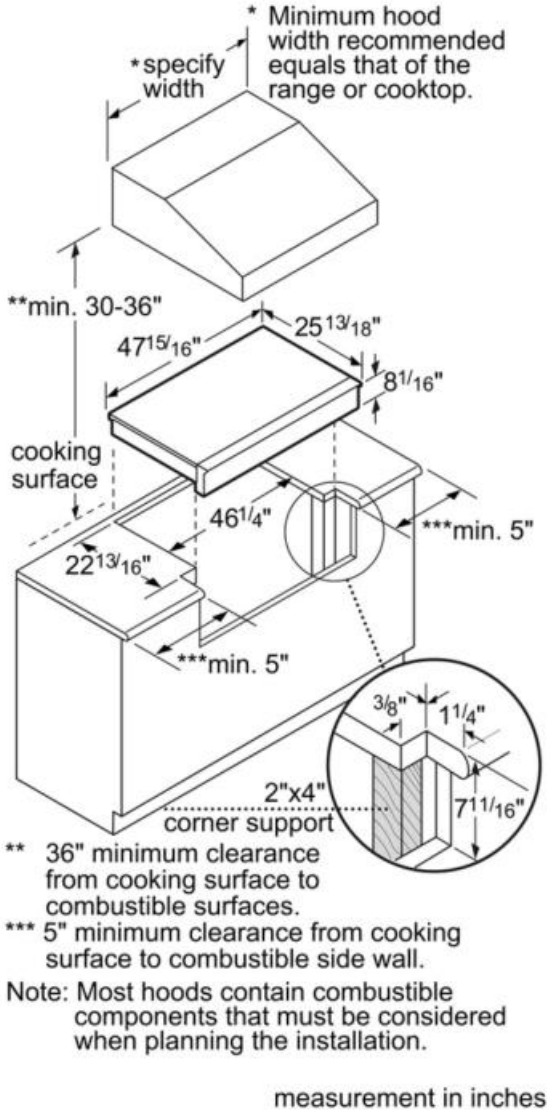

Amps (A)	15
Frequency (Hz)	60
Gas type	Natural gas 15 mbar (USA)
Alternative gas type	Liquid gas 27,5 mbar (USA)
Approval certificates	CSA
Plug type	120V-3 prong
Minimum distance from rear wall (in)	12''
Net weight (lbs)	172
Location of 1st heating element	front left
Power of 1st heating element (W)	0.1-5.27
Type of grate	Cast iron
Number of double grates	3
Optional accessories	PA12CHPBLK, PA12CVRJ, PA12GRILLN, PA48GLBC, PAGRIDDLE, PAKNOBLUNH, PALPKITHN, PWOKRINGHC
Knob material	Full metal
LP Gas Connection Rating (BTU)	90000
Sealed burners	Yes
Included accessories	1 x island trim
Location of 1st heating element	front left
Power of 1st burner (BTU)	18000
Power of 1st heating element (W)	0.1-5.27
Location of 2nd heating element	back left
Power of 2nd burner (BTU)	18000
Power of 2nd heating element (W)	0.1-5.27
Location of 3rd heating element	front centre/cent
Power of 3rd burner (BTU)	18000
Location of 4th heating element	back right
Power of 4th burner (BTU)	18000
Power of 4th heating element (W)	0.62-5.27
Location of 5th heating element	front right
Power of 5th burner (BTU)	18000
Power of 5th heating element (W)	0.62-5.27
Location of 6th heating element	front middle / central
Power of 6th burner (BTU)	18000
Power of 6th heating element (W)	0.62-5.27

COPYRIGHT 2016 BSH HOME APPLIANCES CORPORATION, ALL RIGHTS RESERVED