**Performance**

- Three fan speeds
- Delayed shut off tackles lingering odors for up to 10 minutes
- Built-in 'Clean Filter' reminder light illuminates after 40 hours of operation
- Filter systems are highly efficient at capturing grease
- Dishwasher safe grease collection trays are easily removed
- Powerfully quiet ventilation systems
- Blowers sold separately
- Seven different blowers to choose from the line up according to cooking needs
- Choose from Inline, Remote or Integrated Blowers
- 10" Round duct size
- Vertical or horizontal ducting direction
- Hood includes filters, backdraft damper and transition
- Approved by CSL for damp environments

**Design**

- 24" depth hood is 18" tall and a perfect companion with Pro Harmony Ranges and Rangetops
- Chiseled design for a seamless integration into any kitchen
- Brushed stainless steel finish
- Stainless steel control buttons
- Halogen lighting spotlights your best recipes
- Stainless steel professional style baffle filters
- Dishwasher safe stainless steel baffle filters
- Dimmer lighting - for a soft lighting effect
- Powerfully quiet ventilation systems


COPYRIGHT 2016 BSH HOME APPLIANCES CORPORATION, ALL RIGHTS RESERVED

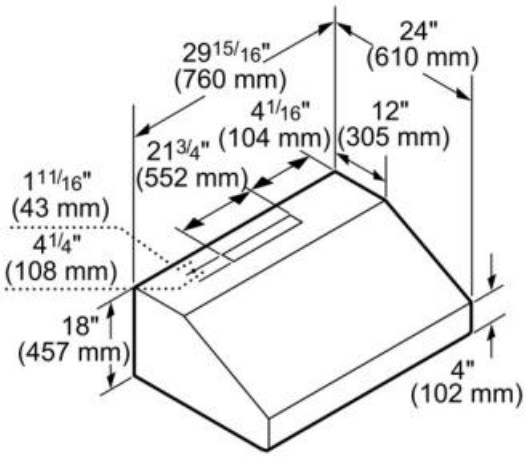


measurements in inches and mm

| | |
|---|---|
| Amps (A) | 15 |
| Frequency (Hz) | 60 |
| Approval certificates | CSA |
| Plug type | 120V-3 prong |
| Net weight (lbs) | 70 |
| Gross weight (lbs) | 78 |
| Required distance above range/rangetop/cooktop | 30"/30" |
| Motor location | without motor |
| Diameter of air duct (in) top | 10 |
| Diameter of air duct (in) back | 10 |
| Operating mode | Ducted |
| Delay shut off modes | 10 |
| Required accessories | Blower |
| Optional accessories | DC30US, DCT30US, EXTNCB25, KHS30QS, PA30JBS, RFPLT1000, RFPLT600, RJ310, WC10 |
| Number of lights | 2 |
| Type of lamps used | Halogen |
| Total power of the lamps (W) | 40; 80 |
| Grease filter material | Washable stainless steel |


COPYRIGHT 2016 BSH HOME APPLIANCES CORPORATION, ALL RIGHTS RESERVED