30 inch Professional Series Combination Oven (oven and convection microwave) PODM301J

INNOVATION

- NEW The only SoftClose® door on the market. Thermador exclusive feature
- Largest comercial style rotisserie with 12 pound capacity. Thermador exclusive feature
- Maxbroil® largest, most powerful broil element on the market. Thermador exclusive feature
- Massive Capacity - Largest oven cavity at 4.7 cu.ft. (overall AHAM)
- Fastest preheat in the luxury segment (around 7 minutes). Thermador exclusive feature
- Superfast 2-hour self clean mode - fastest on the market. Thermador exclusive feature

PERFORMANCE

- True Convection offers precise airflow for cooking on multiple levels without flavor transfer
- NEW 2 Full Access® telescopic racks hold up to 45 pounds each, integrated easy grip handle
- No preheat needed. Industry leading Speed Convection system reduces cooking time by 30%
- CookControl™ temperature probe
- 12 advanced professional cooking modes
- Advanced culinary modes - Warm, Proof and Dehydrate
- Powerful halogen light with automatic dimming
- Advanced culinary modes - Warm, Proof and Dehydrate
- Fast Preheat available for 5 cooking modes
- Electronic oven control ensures precise heating
- Large oven door window for maximum viewing
- Timer offers automatic delay start mode
- Hidden bake element for easy cleaning
- Seven adjustable rack levels for multiple item cooking
- NEW Star-K certified

DESIGN

COPYRIGHT 2016 BSH HOME APPLIANCES CORPORATION, ALL RIGHTS RESERVED

- NEW: Side strips, manifold, exhaust baffle and chronometer now in bold stainless steel design
- Professional style chronometer
- Restaurant style stainless steel knobs and handle
- Bold chiseled professional design
- Blue electronic graphic display controls all timer functions
- See MCES for Microwave feature

COPYRIGHT 2016 BSH HOME APPLIANCES CORPORATION, ALL RIGHTS RESERVED

30 inch Professional Series Combination Oven (oven and convection microwave) PODM301J

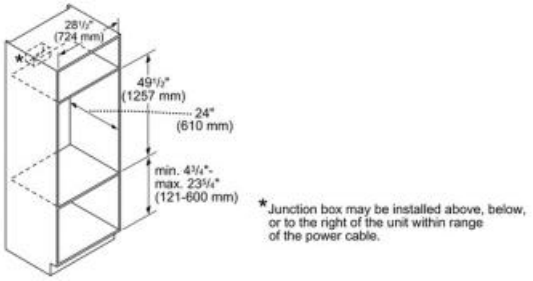

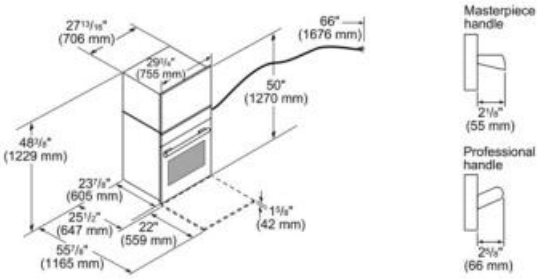

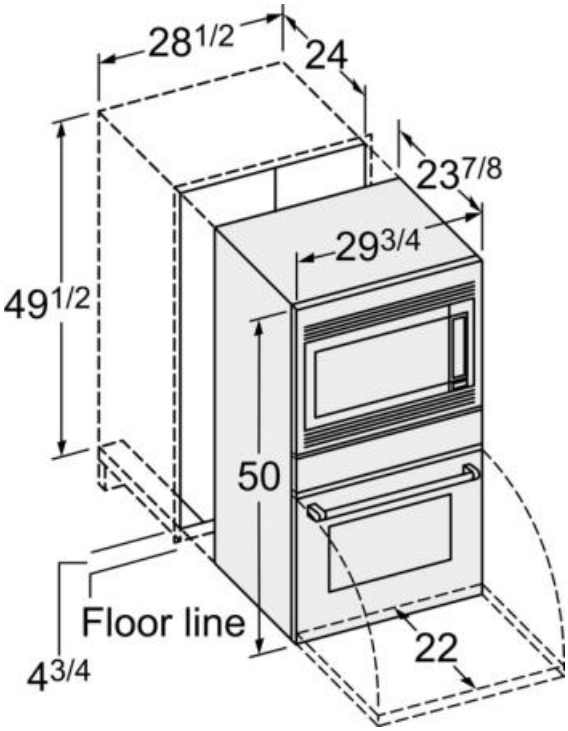

Amps (A)	50
Frequency (Hz)	60
Approval certificates	CSA, STAR-K
Plug type	fixed connection, no plug
Net weight (lbs)	250
Included accessories	3 x oven racks /lower, 1 x rotary spit, 1 x Broiler pan /lower, 1 x temperature probe /lower

COPYRIGHT 2016 BSH HOME APPLIANCES CORPORATION, ALL RIGHTS RESERVED