36 inch Professional Series Pro Grand Commercial Depth Dual Fuel Range PRD364JDGU

INNOVATION

- Patented Pedestal Star® Burner with QuickClean Base™ designed for easy surface cleaning and superior heat spread for any size pan
- Powerful 22,000 BTU (NG) burner (front right)
- Precision simmering capabilities as low as 100°F (375 BTU) with 4 ExtraLow® Simmer burners
- SoftClose® hinges for ultra smooth closing of the oven door
- Superfast 2-hour self-clean mode - fastest in the industry

PERFORMANCE

- 18,000 BTU (NG) Star® Burners
- Titanium surface non-stick, rust-proof cast-aluminum griddle and grill, removable for easy clean-up
- Electronic oven display interfaces to cook timer, meat probe and preheat status with audible alert
- Powerful, 8-pass bake and broil elements
- Third Element Convection offers precise airflow for cooking on multiple levels without flavor transfer
- Large oven 5.7 cu.ft.-accommodates commercial sheet pan
- Full Access® telescopic racks, integrated easy-grip handle
- Six rack levels for multiple item cooking
- Star-K Kosher certified

DESIGN

- Bold Professional design
- Pinhole and panel lighting concepts provide functional and stylish aesthetics
- Restaurant style metal knobs
- Professional style, continuous cast iron grates
- Continuous porcelain, easy to clean cooking surface
- Large oven door window for maximum viewing

COPYRIGHT 2016 BSH HOME APPLIANCES CORPORATION, ALL RIGHTS RESERVED

- Powerful halogen lighting illuminates the oven cavity
- Hidden bake element makes clean-up one smooth surface
- Signature blue indicator lighting

COPYRIGHT 2016 BSH HOME APPLIANCES CORPORATION, ALL RIGHTS RESERVED

36 inch Professional Series Pro Grand Commercial Depth Dual Fuel Range PRD364JDGU

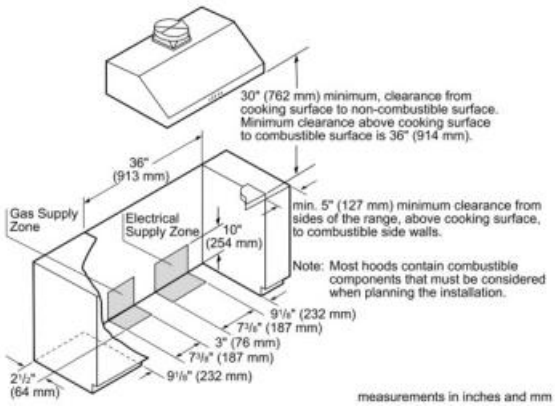

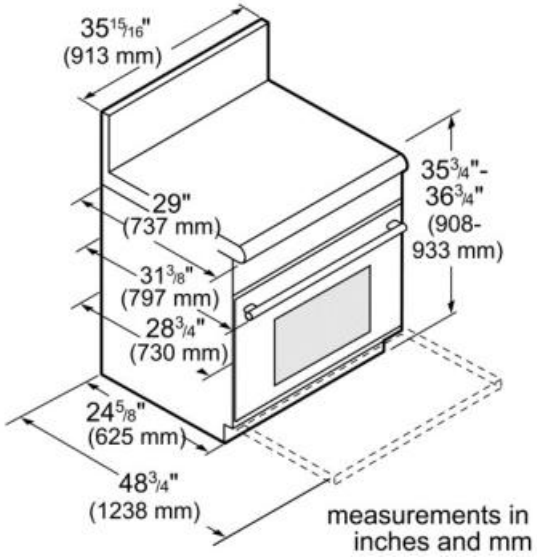

Amps (A)	40
Frequency (Hz)	60
Gas type	Natural gas 15 mbar (USA)
Approval certificates	CSA
Plug type	no plug
Net weight (lbs)	366
Gross weight (lbs)	406
Temperature control	electronic
Time control	No
Number of double grates	2
Knob material	Full metal
Sealed burners	Yes
Location of 1st heating element	front left
Power of 1st heating element (W)	5.27
Power of 1st heating element (W)	5.27
Included accessories	1 x nozzle set for liquid gas, 1 x island trim, 1 x grill plate, 1 x Broiler pan, 3 x telescopic rack, 1 x temperature sensor
Power of 2nd heating element (W)	5.27
Power of 4th heating element (W)	5.27
Power of griddle element	1630
Power of 5th heating element (W)	6.45
Power of 1st burner (BTU)	18000
Location of 2nd heating element	back left
Power of 2nd burner (BTU)	18000
Location of 4th heating element	back right
Power of 4th burner (BTU)	18000
Location of 5th heating element	front right
Power of 5th burner (BTU)	22000

COPYRIGHT 2016 BSH HOME APPLIANCES CORPORATION, ALL RIGHTS RESERVED