36 inch Professional Series Pro Grand Commercial Depth Liquid Propane Range PRL366JG

INNOVATION

- Patented Pedestal Star® Burner with QuickClean Base™ designed for easy surface cleaning and superior heat spread for any size pan
- Powerful 18,000 BTU (LP) burner (front right)
- Precision simmering capabilities as low as 100°F (375 BTU) with 4 ExtraLow® Simmer burners
- SoftClose® hinges for ultra smooth closing of the oven door
- Superfast 2-hour self-clean mode - fastest in the industry

PERFORMANCE

- 15,000 BTU (LP) Star"®"Burners
- Electronic oven display interfaces to cook timer, meat probe and preheat status with audible alert
- Powerful, 25,000 BTU bake and 17,000 BTU broil burners
- Convection Bake offers precise multi-level baking results
- Large oven 5.5 cu.ft.-accommodates commercial sheet pan
- Full Access® telescopic racks, integrated easy-grip handle
- Six rack levels for multiple item cooking
- Star-K Kosher certified

DESIGN

- Bold Professional design
- Pinhole and panel lighting concepts provide functional and stylish aesthetics
- Restaurant style metal knobs
- Professional style, continuous cast iron grates
- Continuous porcelain, easy to clean cooking surface
- Large oven door window for maximum viewing
- Powerful halogen lighting illuminates the oven cavity

COPYRIGHT 2016 BSH HOME APPLIANCES CORPORATION, ALL RIGHTS RESERVED

- Signature blue indicator lighting

COPYRIGHT 2016 BSH HOME APPLIANCES CORPORATION, ALL RIGHTS RESERVED

36 inch Professional Series Pro Grand Commercial Depth Liquid Propane Range PRL366JG

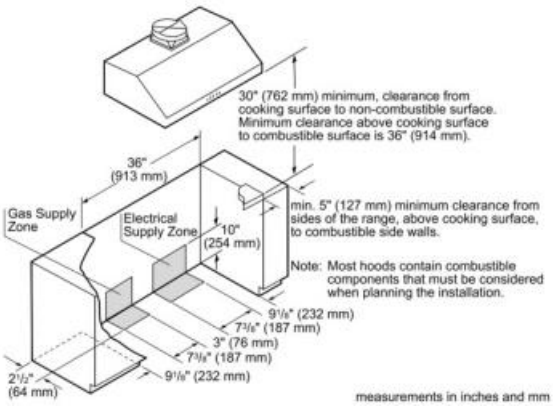

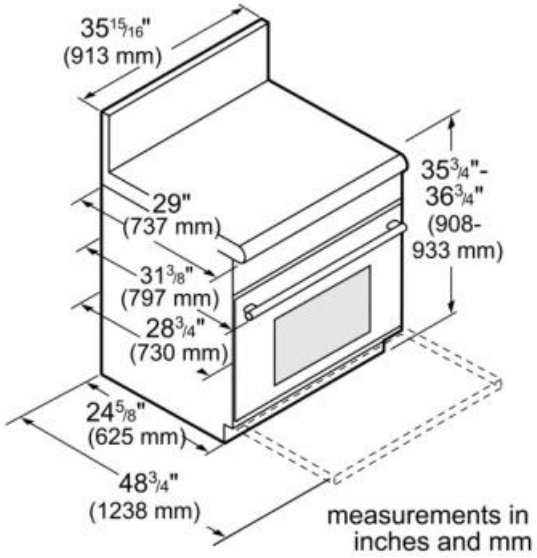

Amps (A)	15
Frequency (Hz)	60
Gas type	Liquid gas 27,5 mbar (USA)
Approval certificates	CSA
Plug type	120V-3 prong
Net weight (lbs)	384
Gross weight (lbs)	426
Temperature control	electronic
Type of grate	Cast iron
Time control	No
Number of double grates	3
Knob material	Full metal
Sealed burners	Yes
Location of 1st heating element	front left
Power of 1st heating element (W)	4.39
Power of 1st heating element (W)	4.39
Included accessories	1 x island trim, 1 x Broiler pan, 3 x telescopic rack, 1 x temperature sensor
Display	blue, LCD
Power of 2nd heating element (W)	4.39
Power of 3rd heating element (W)	4.39
Power of 4th heating element (W)	4.39; 4.39
Power of 5th heating element (W)	5.27
Power of 6th heating element (W)	4.39
Power of 1st burner (BTU)	15000
Location of 2nd heating element	back left
Power of 2nd burner (BTU)	15000
Location of 3rd heating element	middle back
Power of 3rd burner (BTU)	15000
Location of 4th heating element	back right
Power of 4th burner (BTU)	15000
Location of 5th heating element	front right
Power of 5th burner (BTU)	18000
Power of 6th burner (BTU)	15000

COPYRIGHT 2016 BSH HOME APPLIANCES CORPORATION, ALL RIGHTS RESERVED