48 inch Professional Series Pro Grand® Commercial Depth Liquid Propane Range PRL486JDG

INNOVATION

- Patented Pedestal Star® Burner with QuickClean Base™ designed for easy surface cleaning and superior heat spread for any size pan
- Powerful 18,000 BTU (LP) burner (front right)
- Precision simmering capabilities as low as 100°F (375 BTU) with 4 ExtraLow® Simmer burners
- SoftClose® hinges for ultra smooth closing of the oven door
- Superfast 2 hour self clean in both ovens

PERFORMANCE

- 15,000 BTU (LP) Star"®"Burners
- Titanium surface non-stick, rust-proof cast-aluminum griddle and grill, removable for easy clean-up
- Electronic oven display interfaces to cook timer, meat probe and preheat status with audible alert
- Full featured small oven with convection, broil, self clean and meat probe
- Powerful, 25,000 BTU bake and 17,000 BTU broil burners in the large oven, 14,000 BTU bake and 9,000 broil in the small
- Convection Bake offers precise multi-level baking results
- Large oven 5.5 cu.ft.-accommodates commercial sheet pan plus 2.4 cu.ft. in small oven
- Full Access® telescopic racks, integrated easy-grip handle
- Six rack levels in each oven for multiple item cooking
- Star-K Kosher certified

DESIGN

- Bold Professional design
- Pinhole and panel lighting concepts provide functional and stylish aesthetics
- Restaurant style metal knobs

COPYRIGHT 2016 BSH HOME APPLIANCES CORPORATION, ALL RIGHTS RESERVED

- Professional style, continuous cast iron grates
- Continuous porcelain, easy to clean cooking surface
- Large oven door window for maximum viewing
- Powerful halogen lighting illuminates the oven cavity
- Signature blue indicator lighting

COPYRIGHT 2016 BSH HOME APPLIANCES CORPORATION, ALL RIGHTS RESERVED

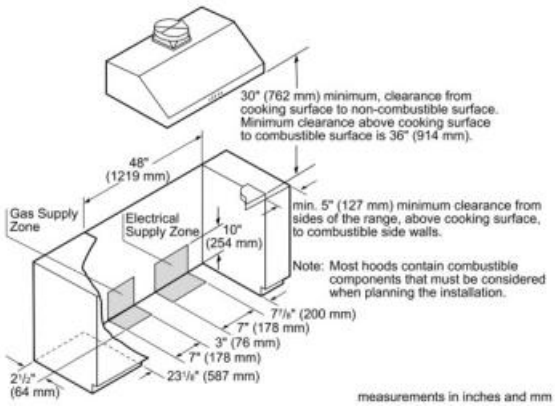

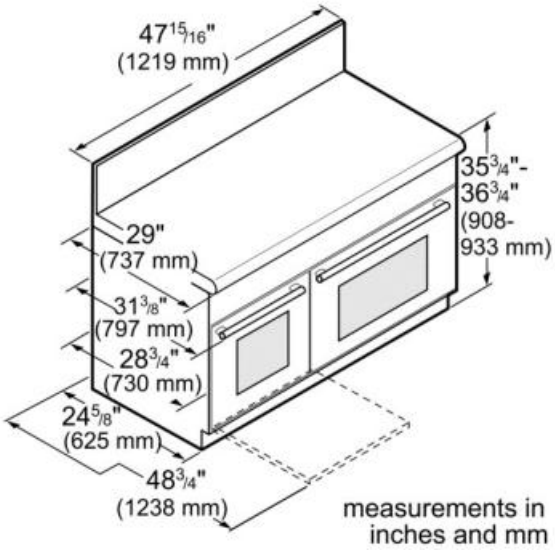

Amps (A)	20
Frequency (Hz)	60
Gas type	Liquid gas 27,5 mbar (USA)
Approval certificates	CSA, UL
Type of grate	Cast iron
Time control	No
Location of 1st heating element	front left
Power of 1st heating element (W)	4.39
Included accessories	1 x island trim, 1 x Broiler pan, 1 x broiler pan small, 2 x telescopic rack - small, 3 x telescopic rack, 2 x temperature sensor
Power of 1st heating element (W)	4.39
Location of 2nd heating element	back left
Power of 2nd heating element (W)	4.39
Location of 3rd heating element	middle back
Power of 3rd heating element (W)	4.39
Location of 6th heating element	rear first right
Power of 6th heating element (W)	4.39

COPYRIGHT 2016 BSH HOME APPLIANCES CORPORATION, ALL RIGHTS RESERVED