INNOVATION

- Patented and exclusive Star® Burner provides superior performance

PERFORMANCE

- Powerful 16,000 BTU Center Burner
- Continuous grates allow pots and pans to glide smoothly across the cooktop
- Automatic electronic re-ignition
- Knobs feature a safety "push to turn" system

DESIGN

- Chiseled, angular design coordinates with the suite of Thermador Masterpiece™ Collection appliances
- High-grade, quality die cast metal knobs

COPYRIGHT 2016 BSH HOME APPLIANCES CORPORATION, ALL RIGHTS RESERVED

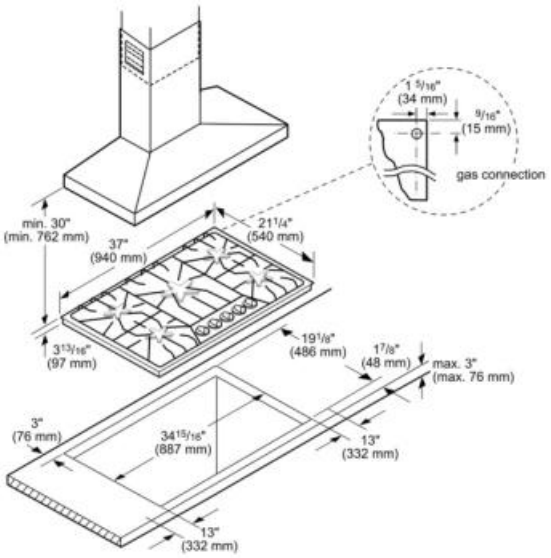

Amps (A)	15
Frequency (Hz)	60
Gas type	Natural gas 15 mbar (USA)
Alternative gas type	Liquid gas 27,5 mbar (USA)
Approval certificates	CSA
Plug type	120V-3 prong
Minimum distance from counter front (in)	1 7/8"
Minimum distance from rear wall (in)	3"
Net weight (lbs)	39
Location of 1st heating element	front left
Type of grate	Cast iron
Number of double grates	2
Optional accessories	SGRIDDLEF, SNLPKITF, SWOKRINGF
Knob material	Full metal
LP Gas Connection Rating (BTU)	45200
Sealed burners	Yes
Number of single grates	1
Included accessories	3 x cast iron pan support
Location of 1st heating element	front left
Power of 1st burner (BTU)	9100
Location of 2nd heating element	back left
Power of 2nd burner (BTU)	12000
Location of 3rd heating element	front centre/cent
Power of 3rd burner (BTU)	16000
Location of 4th heating element	back right
Power of 4th burner (BTU)	9100
Location of 5th heating element	front right
Power of 5th burner (BTU)	12000

COPYRIGHT 2016 BSH HOME APPLIANCES CORPORATION, ALL RIGHTS RESERVED