18 inch Freezer Column with External Ice and Water Dispenser
T18ID800LP

Design

- FREEDOM® Hinge enables true flush design
- Full height door - True cabinet integration without exposed venting grille
- ALL LED sidewall and theater lighting
- Accepts custom or stainless steel panels
- Left Door Swing

Performance

- Dedicated compressor and evaporator
- Electronic controls for precise temperature management
- Flush all stainless steel exterior ice and water dispenser
- LED-Illuminated Dispenser
- Oversized Dispenser Opening
- Rapid Water Replenishment System
- Chilled water, crushed and cubed ice
- FreeFlow® Ice System
- Full length cantilever racks for ultimate adjustability
- Full Width Metal Freezer Shelves
- Full extension drawers at 90° door opening angle
- Oversized Freezer Basket
- SuperFreeze - Freezes food quickly
- Sabbath mode
- Economy mode
- Vacation mode
- Door open alarm
- ENERGY STAR® Qualified
- 7.8 Cu. Ft.

COPYRIGHT 2016 BSH HOME APPLIANCES CORPORATION, ALL RIGHTS RESERVED

18 inch Freezer Column with External Ice and Water Dispenser
T18ID800LP

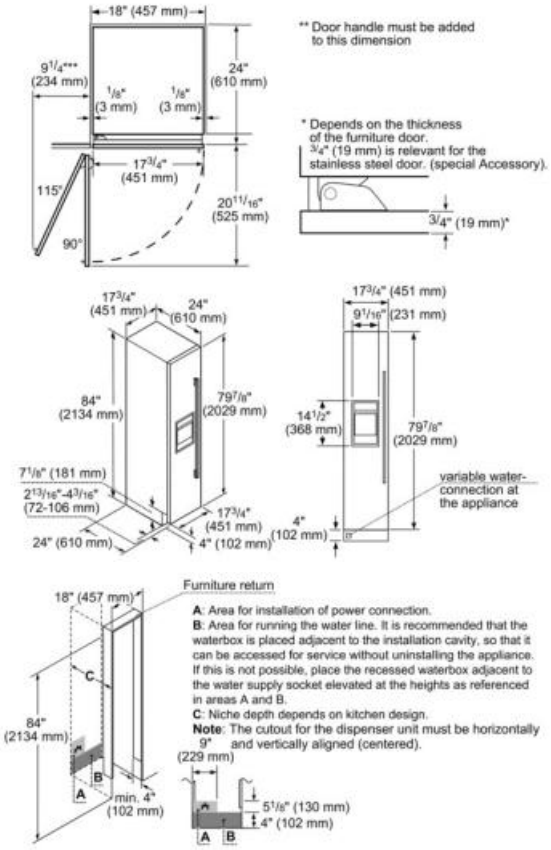

Amps (A)	15
Frequency (Hz)	60
Approval certificates	ETL, ETL C
Plug type	120V-3 prong
Net weight (lbs)	279
Gross weight (lbs)	307
Refrigerator gross capacity (cu.ft.)	0
Freezer gross capacity (cu.ft.)	8
Number of compressors	1
Optional accessories	FRAMEKIT10, HEATRKIT10, MS36HNDL10, PR36HNDL10, REPLFLTR10, SCRNFLTR10, TCH18ID800, TFL18ID800
Number of door bins - freezer	2
Number of shelves - freezer	2
Reversible door hinge	No

COPYRIGHT 2016 BSH HOME APPLIANCES CORPORATION, ALL RIGHTS RESERVED