Design

- FREEDOM® Hinge enables true flush design
- Full height door - True cabinet integration without exposed venting grille
- ALL LED sidewall and theater lighting
- Accepts custom or stainless steel panels
- Reversible Door Swing

Performance

- Dedicated compressor and evaporator
- FreeFlow® Cold Air System - Air channel in the door ensures that items stored on the door are as cold as on the shelves
- Electronic controls for precise temperature management
- FlexTemp® Drawer optimized for fish, meat and produce
- Carbon air filter reduces odors and keeps air clean and fresh
- Full length cantilever racks for ultimate adjustability
- Full width glass shelves with metal trim
- Full extension drawers at 90° door opening angle
- Gallon door bins
- SuperCool - Chills food quickly
- Sabbath mode
- Economy mode
- Vacation mode
- Door open alarm
- ENERGY STAR® Qualified
- 17.2 Cu. Ft.

COPYRIGHT 2016 BSH HOME APPLIANCES CORPORATION, ALL RIGHTS RESERVED

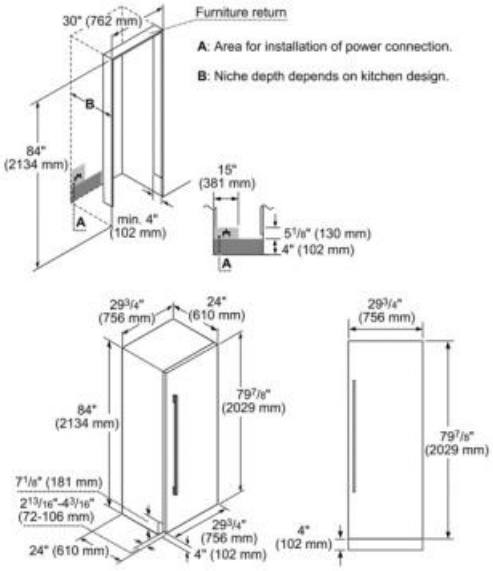

Amps (A)	15
Frequency (Hz)	60
Approval certificates	ETL, ETL C
Net weight (lbs)	333
Gross weight (lbs)	368
Refrigerator gross capacity (cu.ft.)	17
Humidity control drawers	Yes
Number of door bins - refrigerator	2
Reversible door hinge	Yes

COPYRIGHT 2016 BSH HOME APPLIANCES CORPORATION, ALL RIGHTS RESERVED